3GPP TSG-SA2 Meeting #135
Split, Croatia, 14th Oct 2019 - 18th Oct 2019

S2-1909620

EPS / RAT fallback for IMS voice over ePDG/N3WIF

LG Electronics

LG Electronics

Background

Assumption

- Operator provides IMS voice
  - via EPS/RAT fallback
  - via ePDG

Target scenario

- UE has IMS voice over non-3GPP via ePDG
- UE moves out of non-3GPP coverage
- UE triggers handover of IMS voice session of non-3GPP access to 3GPP access
- What happens?

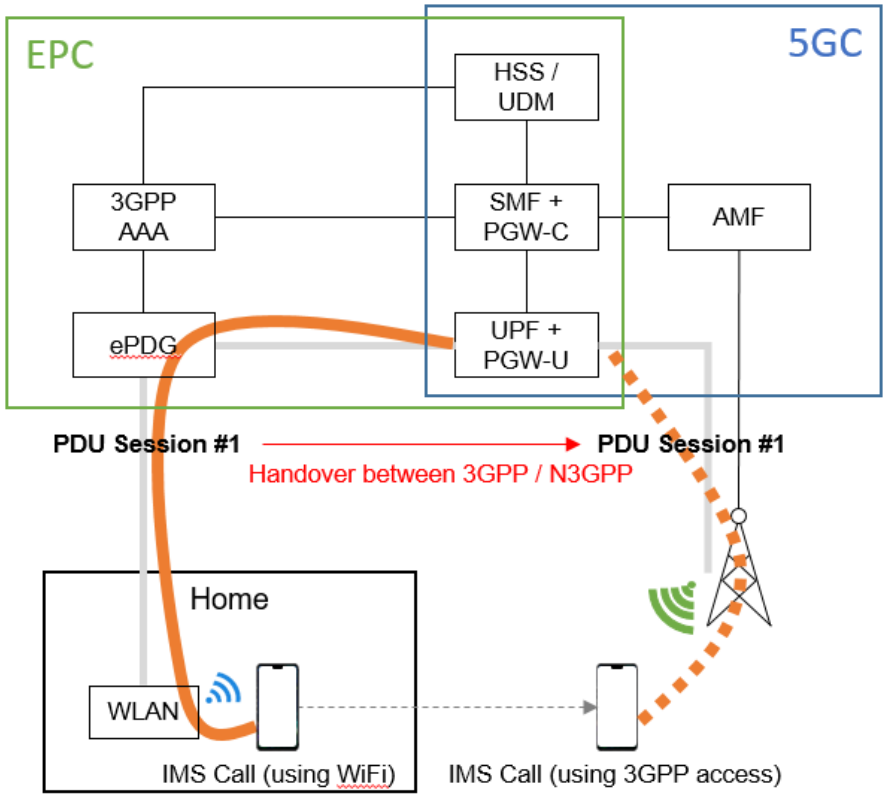

Life's Good

Problem

- **1. EPS/RAT fallback is triggered by NG-RAN during the PDU Session Modification procedure while PDU Session Establishment procedure is used to handover session between 3GPP access and non-3GPP access.**

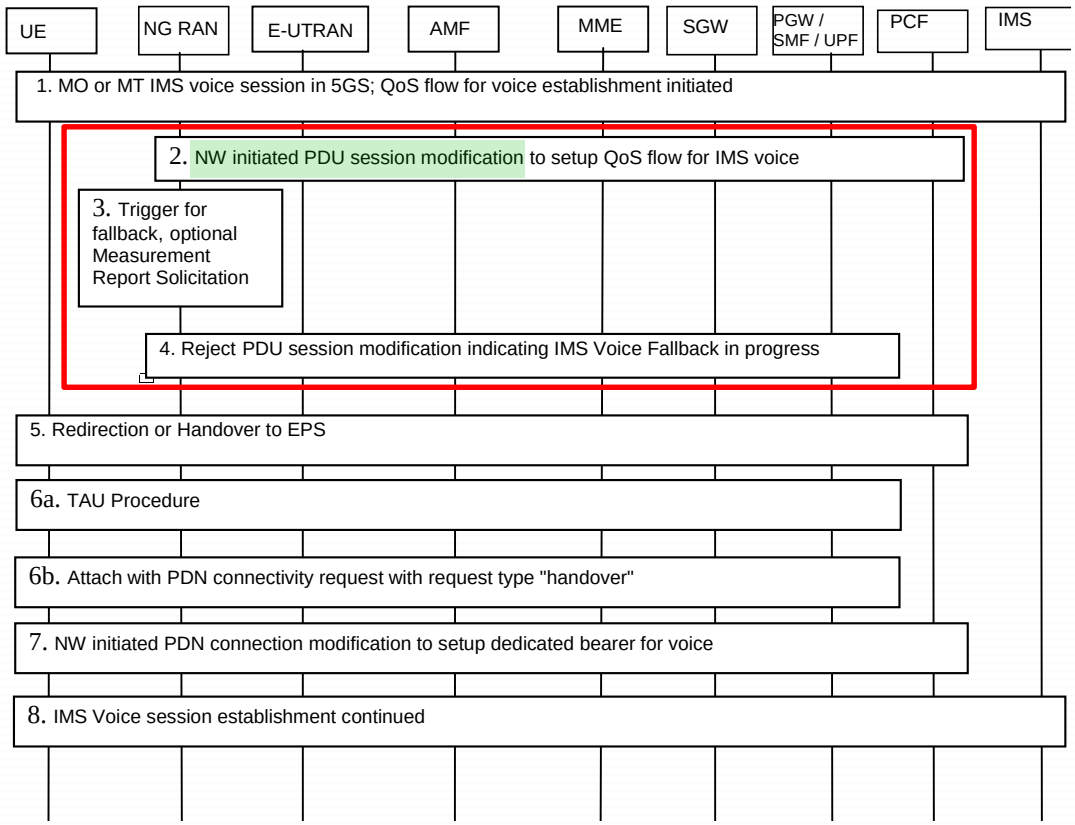

<EPS fallback procedure>

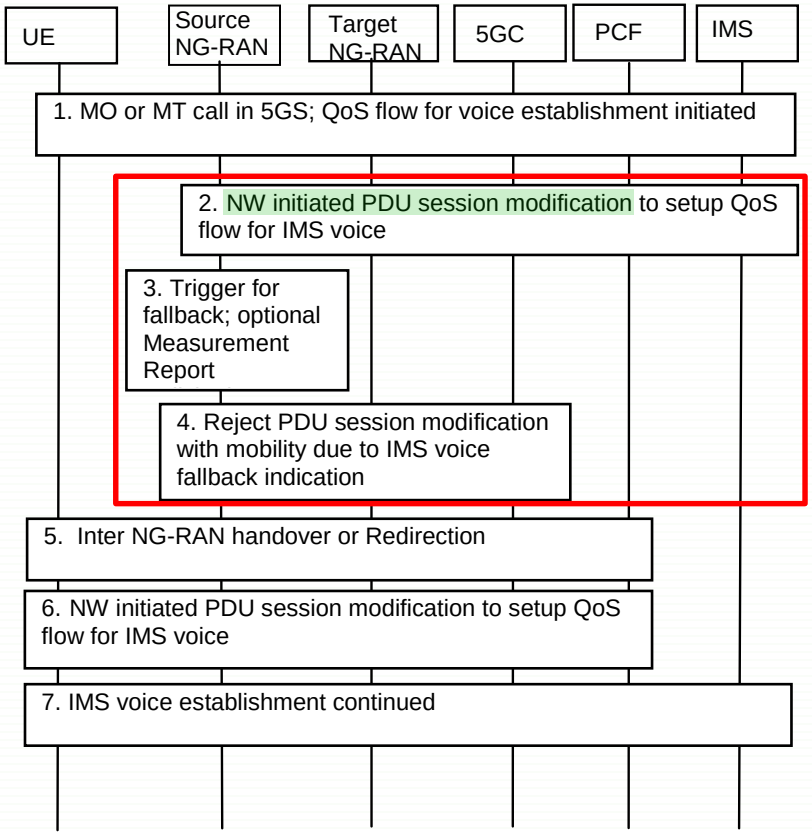

<RAT fallback procedure>

Life's Good

Problem (cont.)

- **2. According to TS 38.413*, the NG-RAN rejects QoS Flow for IMS voice but accepts other QoS Flows.** *See Annex A
  - Even if the NG-RAN is configured to trigger EPS/RAT fallback during the PDU Session Establishment, the PDU Session Establishment Accept is sent to the UE and the UE starts to send uplink traffic.

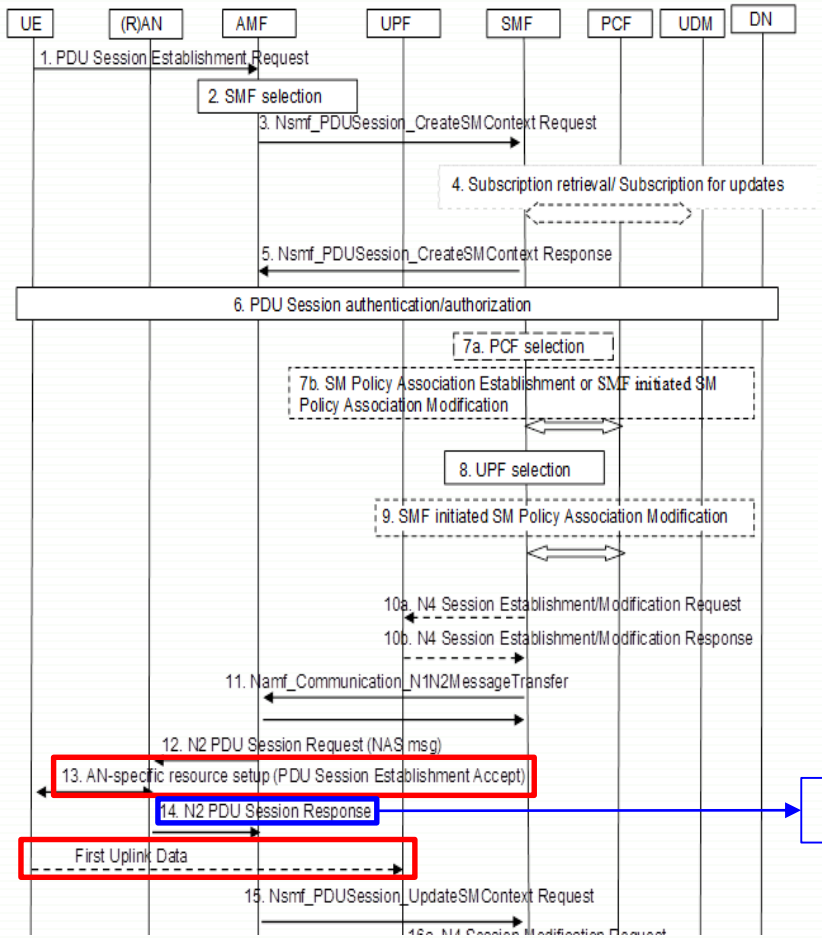

Should include QoS Flow for IMS voice and IMS signaling

11. SMF to AMF: Namf_Communication_N1N2MessageTransfer (PDU Session ID, N2 SM information (PDU Session ID, QFI(s), QoS Profile(s), CN Tunnel Info, S-NSSAI from the Allowed NSSAI, Session-AMBR, PDU Session Type, User Plane Security Enforcement information, UE Integrity Protection Maximum Data Rate, RSN), N1 SM container (PDU Session Establishment Accept ([QoS Rule(s) and QoS Flow level QoS parameters if needed for the QoS Flow(s) associated with the QoS rule(s)], selected SSC mode, S-NSSAI(s), UE Requested DNN, allocated IPv4 address, interface identifier, Session-AMBR, selected PDU Session Type, [Reflective QoS Timer] (if available), [P-CSCF address(es)], [Control Plane Only indicator], [Header Compression Configuration], [Always-on PDU Session Granted], [Small Data Rate Control parameters], [Small Data Rate Control Status]))). If multiple UPFs are used for the PDU Session, the CN Tunnel Info contain tunnel information related with the UPF that terminates N3.

13. (R)AN to UE: The (R)AN may issue AN specific signalling exchange with the UE that is related with the information received from SMF. For example, in case of a NG-RAN, an RRC Connection Reconfiguration may take place with the UE establishing the necessary NG-RAN resources related to the QoS Rules for the PDU Session request received in step 12.

(R)AN forwards the NAS message (PDU Session ID, N1 SM container (PDU Session Establishment Accept)) provided in step 12 to the UE. (R)AN shall only provide the NAS message to the UE if the AN specific signalling exchange with the UE includes the (R)AN resource additions associated to the received N2 command.

Rejects QoS Flow for IMS voice and accepts QoS Flow for IMS signaling

Life's Good

Candidate Solutions

NW based solution (shows EPS fallback)

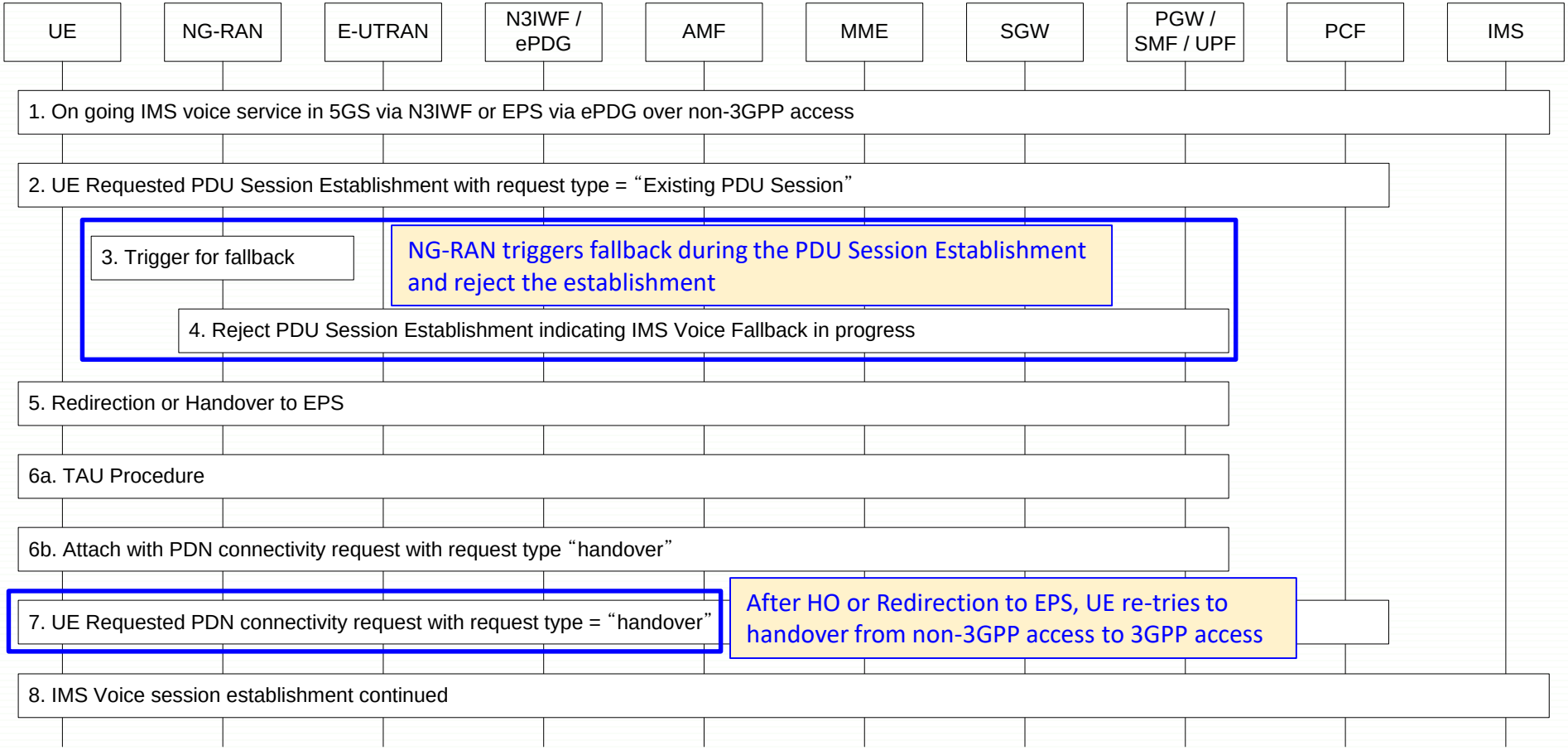

Life’s Good

Candidate Solutions

UE based solution (shows EPS fallback)

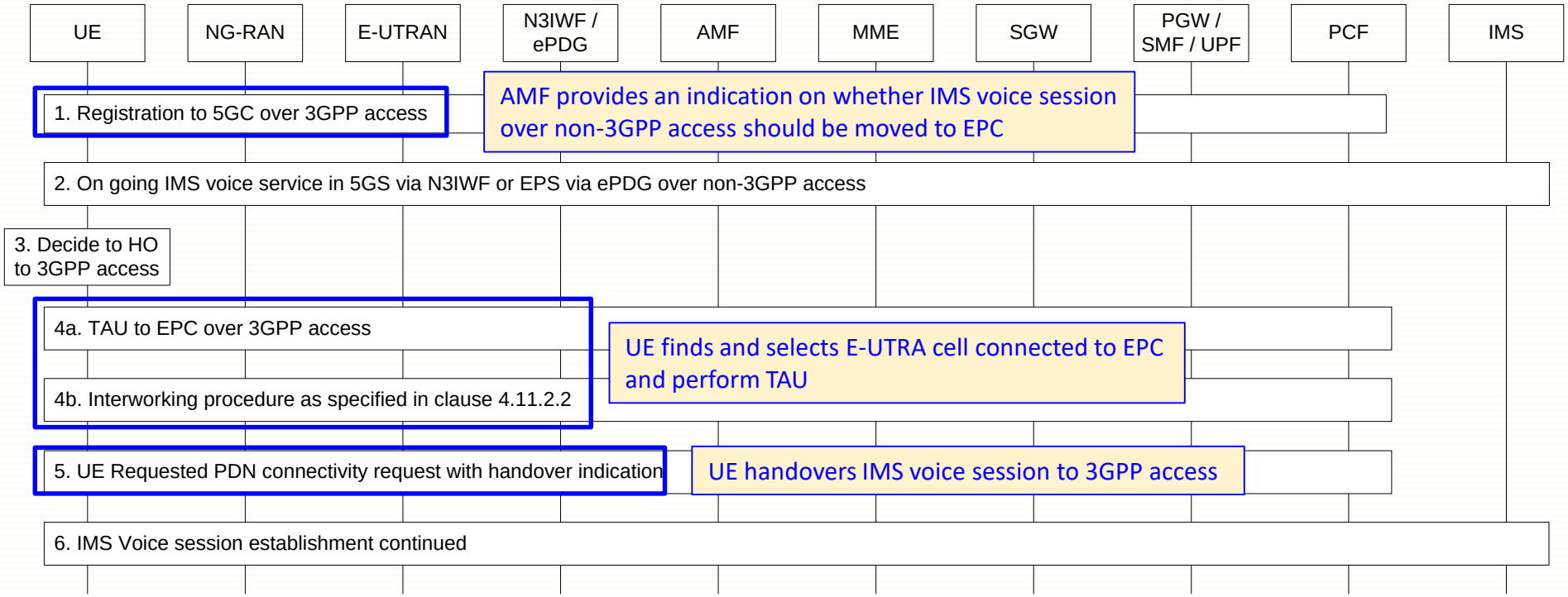

Life's Good

Solution comparison

	NW based solution	UE based solution
Impact to the RAN	NG-RAN triggers handover or redirection to EPC (or E-UTRA connected to 5GC) during the PDU Session Establishment and rejects the PDU Session setup so that accept message is not sent to the UE.	No impact
Impact to the Network	No impact	AMF provides an indication on whether IMS voice session over non-3GPP access should be moved to EPC (or E-UTRA connected to 5GC) when the UE wants to handover from non-3GPP access to 3GPP access.
Impact to the UE	After handover or redirection to EPC (or E-UTRA connected to 5GC) is finished, the UE re-tries to handover the IMS session from non-3GPP access to 3GPP access connected to the EPC (or connected to the 5GC)	Before handover IMS voice session from non-3GPP access to 3GPP access, UE finds and selects E-UTRA cell connected to EPC and perform TAU (or E-UTRA cell connected to 5GC and perform Registration).
procedure delay	3-step (long delay) 1. HO try from non-3GPP to 3GPP 2. handover or redirection to EPC (or E-UTRA connected to 5GC) 3. HO from non-3GPP to 3GPP	2-step (short delay) 1. TAU to EPC (or Registration via E-UTRA connected to 5GC) 2. HO from non-3GPP to 3GPP
Continuity of other services	Supported	If the UE has on-going active data transmission over 3GPP access, service is temporarily interrupted.

Life's Good

Annex A

According to TS 38.413

8.2.3 → PDU Session Resource Modify

8.2.3.2 → Successful Operation

Upon reception of the PDU SESSION RESOURCE MODIFY REQUEST message to setup a QoS flow for IMS voice, if the NG-RAN node is not able to support IMS voice, the NG-RAN node shall initiate EPS fallback or RAT fallback for IMS voice procedure as specified in TS 23.501 [9] and report unsuccessful establishment of the QoS flow in the *PDU Session Resource Modify Response Transfer* IE or in the *PDU Session Resource Modify Unsuccessful Transfer* IE with cause value "IMS voice EPS fallback or RAT fallback triggered".

9.2.1.6 → PDU SESSION RESOURCE MODIFY RESPONSE

Direction: NG-RAN node → AMF

IE/Group Name	Presence	Range	IE type and reference	Semantics description	Criticality	Assigned Criticality
Message Type	M		9.3.1.1		YES	reject
AMF UE NGAP ID	M		9.3.3.1		YES	ignore
RAN UE NGAP ID	M		9.3.3.2		YES	ignore
PDU Session Resource Modify Response List		*0..1*			YES	ignore
>PDU Session Resource Modify Response Item		*1..<maxnoofPDUSessions>*			-	
>>PDU Session ID	M		9.3.1.50		-	
>>PDU Session Resource Modify Response Transfer	M		OCTET STRING	Containing the *PDU Session Resource Modify Response Transfer* IE specified in subclause 9.3.4.4.	-	
PDU Session Resource Failed to Modify List		*0..1*			YES	ignore
>PDU Session Resource Failed to Modify Item		*1..<maxnoofPDUSessions>*			-	
>>PDU Session ID	M		9.3.1.50		-	
>>PDU Session Resource Modify Unsuccessful Transfer	M		OCTET STRING	Containing the *PDU Session Resource Modify Unsuccessful Transfer* IE specified in subclause 9.3.4.17.	-	
User Location Information	O		9.3.1.16		YES	ignore
Criticality Diagnostics	O		9.3.1.3		YES	ignore

9.3.4.4 → PDU Session Resource Modify Response Transfer

This IE is transparent to the AMF.

IE/Group Name	Presence	Range	IE type and reference	Semantics description	Criticality	Assigned Criticality
DL NG-U UP TNL Information	O		UP Transport Layer Information 9.3.2.2	NG-RAN node endpoint of the NG-U transport bearer, for delivery of DL PDUs.	-	
UL NG-U UP TNL Information	O		UP Transport Layer Information 9.3.2.2	Identifies the NG-U transport bearer at the 5GC node.	-	
QoS Flow Add or Modify Response List		*0..1*			-	
>QoS Flow Add or Modify Response Item		*1..<maxnoofQoSFlows>*			-	
>>QoS Flow Identifier	M		9.3.1.51		-	
Additional DL QoS Flow per TNL Information	O		QoS Flow per TNL Information List 9.3.2.1	NG-RAN node endpoint of the additional NG-U transport bearer(s) for delivery of DL PDUs for split PDU session, together with associated QoS flows.	-	
QoS Flow Failed to Add or Modify List	O		QoS Flow List with Cause 9.3.1.13		-	
Additional NG-U UP TNL Information	O		UP Transport Layer Information Pair List 9.3.2.11	NG-RAN node endpoint of the NG-U transport bearer corresponding to the modified UPF endpoint received in the *PDU Session Resource Modify Request Transfer* IE in case of PDU session split.	YES	ignore

Contains per QoS Flow-level information, i.e. can be used when some of QoS Flows are accepted

9.3.4.17 → PDU Session Resource Modify Unsuccessful Transfer

This IE is transparent to the AMF.

IE/Group Name	Presence	Range	IE type and reference	Semantics description
Cause	M		9.3.1.2	
Criticality Diagnostics	O		9.3.1.3	

Contains per Session-level information, i.e. can be used when non-of QoS Flows are accepted

Life's Good